JOUCOMATIC

MICRO SOLENOID VALVES

direct operated

Ø M3 subbase-mounted body

NC 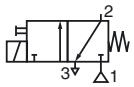

NO 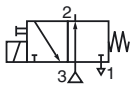

3/2
Series
188
Type
Micro 10

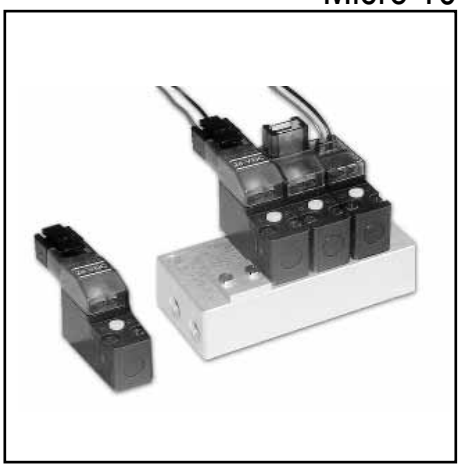

GENERAL

Fluid	Air or neutral gas, non-lubricated, filtered at 25 µm
Operating pressure	7 bar max.
Ambient temperature	+5°C to +50°C
Flow (Qv at 6 bar)	See “specifications”
Manual operator	Impulse-type (without manual operator on request)
Switching time	10 ms (<10 ms on request)

CONSTRUCTION

Body	PA (polyamide) MXD6
Internal parts	Stainless steel, nickel-plated steel, synthetic material, aluminium
Seals	NBR (nitrile), FPM (fluoroelastomer) on request

ELECTRICAL CHARACTERISTICS

voltage (other voltages on request)	consumption	insulation class	degree of protection	electrical connection
24V = 12 V = 5 V = } +10%, -15%	1W - 1,3W	F	IP 40	connector with two 0.5 mm² lead wires + built-in LED and electrical protection or cable ends, 0,5 m long

The solenoid valves are designed for continuous operation within the maximum ambient temperature limits.

SPECIFICATIONS

symbol	orifice size (mm) 1 → 2	orifice size (mm) 2 → 3	flow at 6 bar l/min (ANR)	flow coeff. Kv	operating pressure (bar) min.	operating pressure (bar) max.	consumption (W)	type of electrical connection (✻)	catalogue number
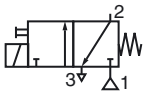	0,5	0,7	8	0,12	0	8	1,3	1	**18801003**
								2	**18801076**
								3	**18801074**
								4	**18801078**
							1	5	**18801072**
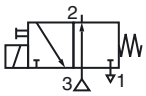	0,5	0,7	8	0,12	0	6	1,3	1	**18801063**
								2	**18801077**
								3	**18801075**
								4	**18801079**
							1	5	**18801073**

(✻) Type 1,2,3, 4 with LED and electrical protection
1 = horizontal, width 5,08 mm
2 = vertical, width 5,08 mm
3 = horizontal, width 2,54 mm
4 = vertical, width 2,54 mm
5 = cable ends 0,5 m long, 0,25 mm²

OPTIONS

- versions with latching coil : consult us

E

00217GB-2011/R01
Availability, design and specifications are subject to change without notice. All rights reserved.

DIMENSIONS (mm), WEIGHT (kg)

weight
0,0095

type 1

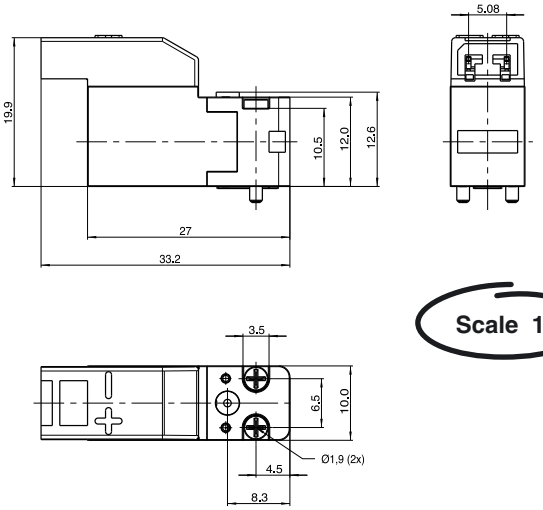

Scale 1

type 2

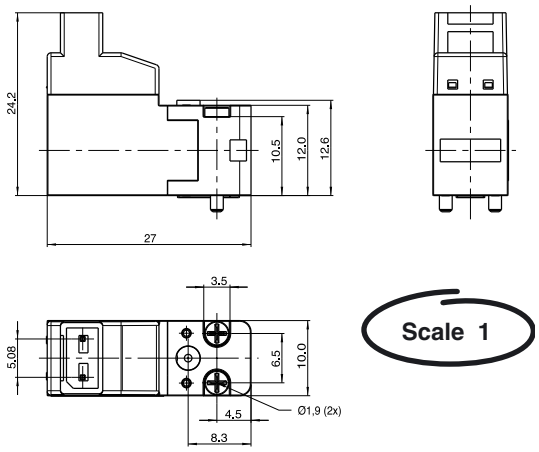

Scale 1

type 3

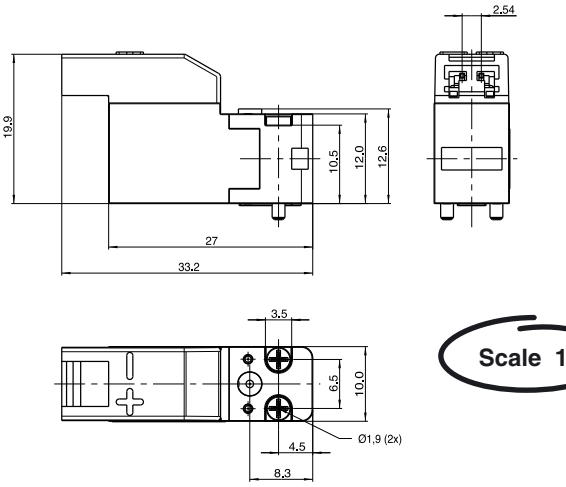

Scale 1

type 4

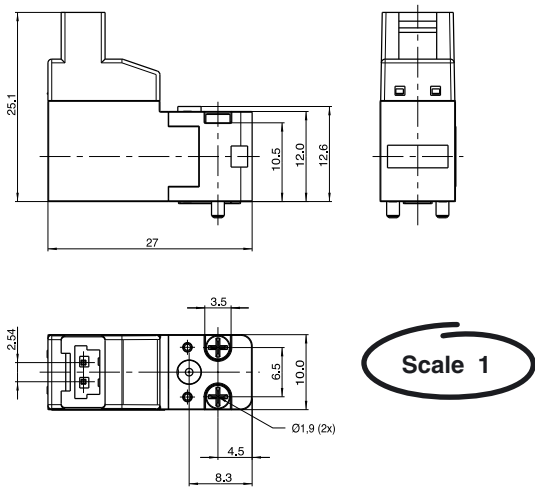

Scale 1

type 1

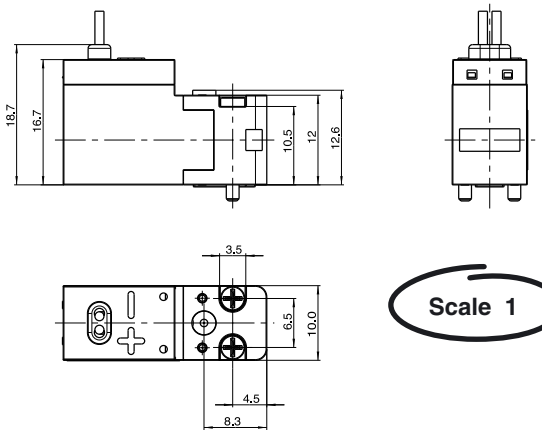

Scale 1

flange facing

NO
3 = Pressure 2 = Outlet 1 = Exhaust

NC
1 = Pressure 2 = Outlet 3 = Exhaust

Use in vacuum (NO)
3 = Vacuum pump 2 = Outlet 1 = Atmosphere

Use in vacuum (NC)
1 = Vacuum pump 2 = Outlet 3 = Atmosphere

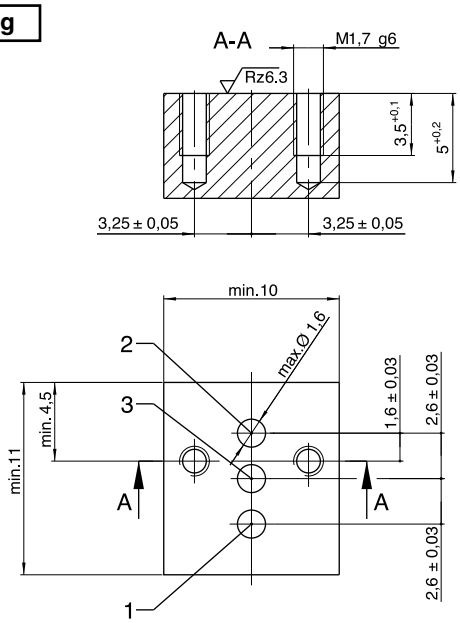

00217GB-2006/R02
Availability, design and specifications are subject to change without notice. All rights reserved.

DIMENSIONS (mm), WEIGHT (kg)

solenoid valve mounted on **single subbase**

number of valves	subbase catalogue number*	weight
1	**35300101**	0,015

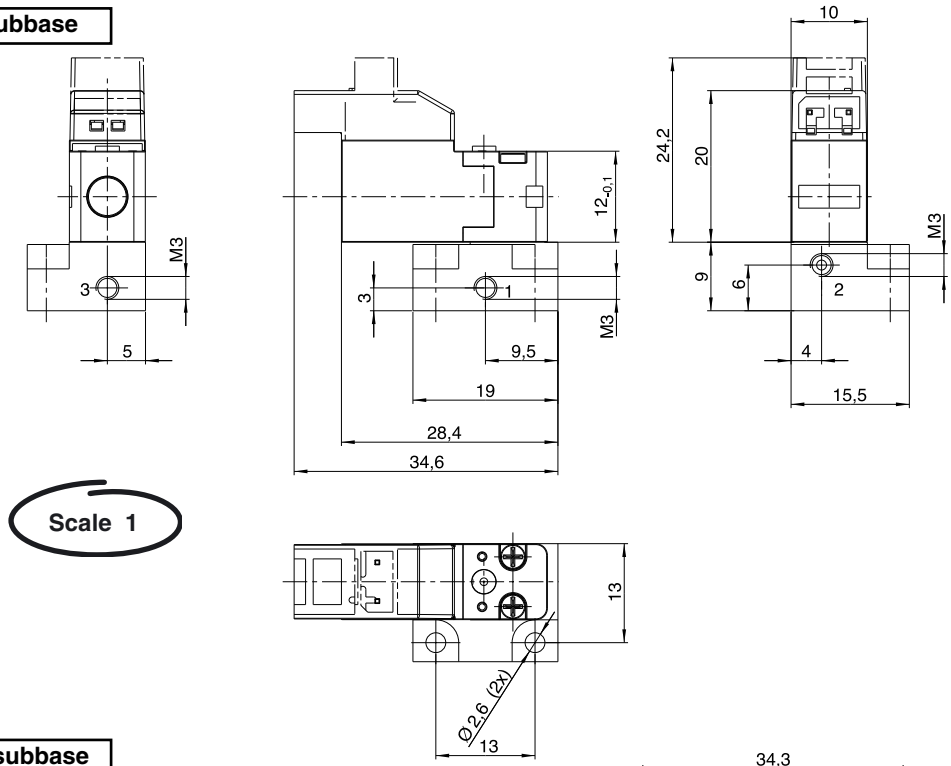

Scale 1

solenoid valve mounted on **multiple subbase**

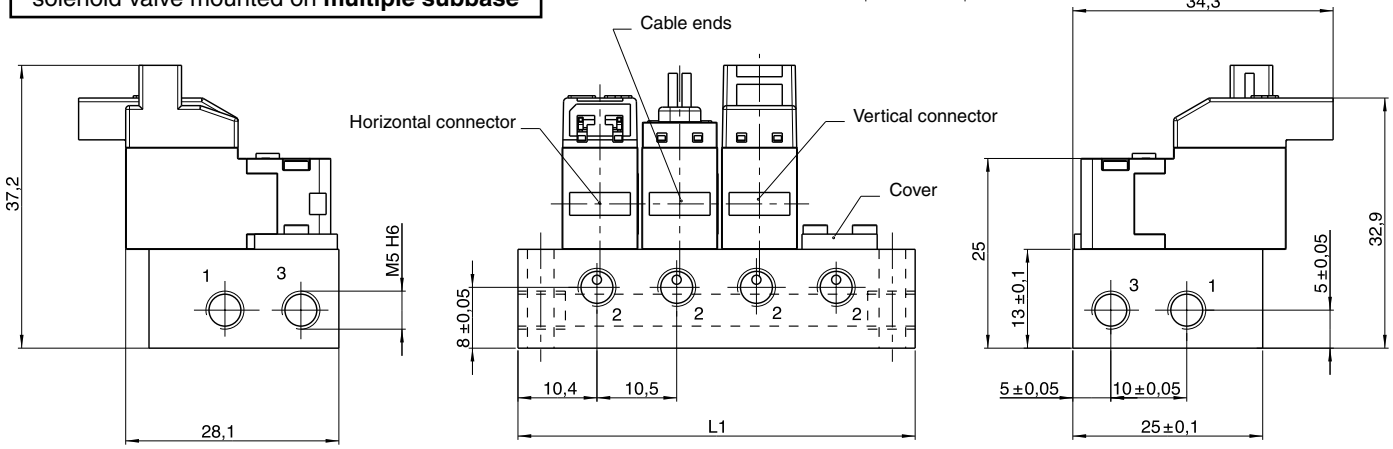

number of valves	subbase catalogue number*	length L1	length L2	weight
2	**35300102**	33,5	27,5	0,051
3	**35300103**	44	38	0,069
4	**35300104**	54,5	48,5	0,086
5	**35300105**	65	59	0,104
6	**35300106**	75,5	69,5	0,122
7	**35300107**	86	80	0,139
8	**35300108**	96,5	90,5	0,156
9	**35300109**	107	101	0,175
10	**35300110**	117,5	111,5	0,193

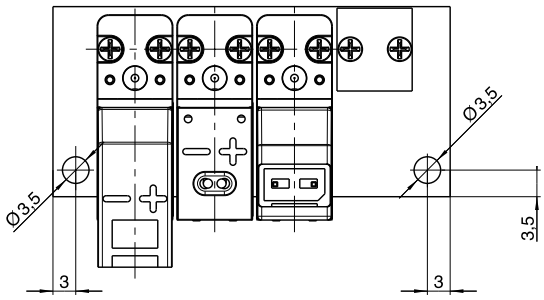

Scale 1

A : Blanking plate, **cat. no. 88135305**

* The connectors must be ordered **separately**, please indicate the quantity and one of the following codes:
Connector, 2 wires
Distance between contacts 5,08 mm - Length 0,5 m - **cat. no.: 88118801**
- Length 1,5 m - **cat. no.: 88118802**
- Length 3 m - **cat. no.: 88118803**
Distance between contacts 2,54 mm - Length 0,5 m - **cat. no.: 88118806**
- Length 1,5 m - **cat. no.: 88118807**
- Length 3 m - **cat. no.: 88118808**

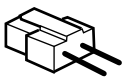

00217GB-2006/R02
Availability, design and specifications are subject to change without notice. All rights reserved.